Ship Oct 7th

Work Order ID 74257

Tuesday, September 27, 2011 1:53:23 PM

Item ID: D3915-041 **Accept** **Setup Start**

Revision ID: **Stop**

Item Name: Light Lid Assemby, Long Basket

Start Date: 9/27/2011 **Start Qty:** 1.00 **Cust Item ID:**

Required Date: 10/7/2011 **Req'd Qty:** 1.00 **Customer:**

Reference:

Approvals: **Process Plan:** JMF **Date:** 11-09-27 **Tooling:** _____ **Date:** _____ **Run Start**

QC: _____ **Date:** _____ **SPC (Y/N):** _____ **Date:** _____ **Stop**

Sequence ID/ Work Center ID	Operation Description	Set Up/ Run Hours	Tool ID	Tool #	Plan Code	Accept Qty	Reject Qty	Reject Number	Insp. Stamp
Draw Nbr	**Revision Nbr**								
D3915	C								
100	Weld per dwg A/R Aluminum rod Batch: _____	0.00							
Large Fab	Large Fab M117889								
Large Fab	**Memo**	0.00							
	1- assemble ribs , weld as per dwg D3915 using DT9606A. When welding D4019-3, weld top and bottom then make a small hole in the weld to let air out. Then weld remaining sides of D4019-3 Rib. Let it cool down, then block holes with weld.								
	****DO NOT WELD THE (4) CORNERS. GRIND OFF CORNERS TO HAVE A 1/8" GAP TO GET THE ACID AND ALODINE OUT OF BASKET LID FRAME****								
	2- weld hinge, label plate and Mounting plates as per dwg D3915								
110	QC9- Inspect visual per QSI004- Fusion Welds	0.00							
QC	**Memo**	0.00							
Quality Control									

JMF 11/10/03

AY 11/10/03 (1x)

1 0 BE 11/10/03

Dart Aerospace Ltd

W/O:		WORK ORDER CHANGES					
DATE	STEP	PROCEDURE CHANGE	By	Date	Qty	Approval Chief Eng / Prod Mgr	Approval QC Inspector

Part No: _____ **PAR #:** _____ **Fault Category:** _____ **NCR:** Yes No **DQA:** _____ **Date:** _____

Resolution: _____ **Disposition:** _____ **QA: N/C Closed:** _____ **Date:** _____

NCR:		WORK ORDER NON-CONFORMANCE (NCR)						
DATE	STEP	Description of NC Section A	Corrective Action Section B			Verification Section C	Approval Chief Eng	Approval QC Inspector
			Initial Chief Eng	Action Description Chief Eng	Sign & Date			

NOTE: Date & initial all entries

H:\fFORMS\Quality Assurance\approved QA\NCRWO RevE

Work Order ID 74257

Tuesday, September 27, 2011 1:53:23 PM

Item ID: D3915-041 **Accept** **Setup Start**

Revision ID: **Stop**

Item Name: Light Lid Assemby, Long Basket

Start Date: 9/27/2011 **Start Qty:** 1.00 **Cust Item ID:**

Required Date: 10/7/2011 **Req'd Qty:** 1.00 **Customer:**

Reference:

Run Start

Approvals: **Process Plan:** _____ **Date:** _____ **Tooling:** _____ **Date:** _____

Stop

QC: _____ **Date:** _____ **SPC (Y/N):** _____ **Date:** _____

Sequence ID/ Work Center ID	Operation Description	Set Up/ Run Hours	Tool ID	Tool #	Plan Code	Accept Qty	Reject Qty	Reject Number	Insp. Stamp
120	QC5- Inspect part completeness to step on W/O	0.00							
QC	Memo	0.00	S 11/10/04			100			
Quality Control									
130	Chemical Conversion Coat per QSI005 4.1	0.00							
HandFinish	Memo	0.00							
Hand Finishing	***ENSURE TO RINSE CAREFULLY ACID AND ALODINE***								
140	Weld per dwg A/R Aluminum rod Batch:_____ H 117889	0.00							
Large Fab	Memo	0.00							
Large Fab	1- weld (4) corners								

IX DM-R 11/10/04

SS- 11/10/04 (1x)

Dart Aerospace Ltd

W/O:		WORK ORDER CHANGES					
DATE	STEP	PROCEDURE CHANGE	By	Date	Qty	Approval Chief Eng / Prod Mgr	Approval QC Inspector

Part No: _____ **PAR #:** _____ **Fault Category:** _____ **NCR:** Yes No **DQA:** _____ **Date:** _____

Resolution: _____ **Disposition:** _____ **QA: N/C Closed:** _____ **Date:** _____

NCR:		WORK ORDER NON-CONFORMANCE (NCR)						
DATE	STEP	Description of NC Section A	Corrective Action Section B			Verification Section C	Approval Chief Eng	Approval QC Inspector
			Initial Chief Eng	Action Description Chief Eng	Sign & Date			

NOTE: Date & initial all entries

H:\fFORMS\Quality Assurance\approved QA\NCRWO RevE

Work Order ID 74257

Tuesday, September 27, 2011 1:53:23 PM

Item ID: D3915-041 **Accept** **Setup Start** **Stop**

Revision ID:

Item Name: Light Lid Assemby, Long Basket

Start Date: 9/27/2011 **Start Qty:** 1.00 **Cust Item ID:**

Required Date: 10/7/2011 **Req'd Qty:** 1.00 **Customer:**

Reference:

Run Start **Stop**

Approvals: **Process Plan:** _____ **Date:** _____ **Tooling:** _____ **Date:** _____

QC: _____ **Date:** _____ **SPC (Y/N):** _____ **Date:** _____

Sequence ID/ Work Center ID	Operation Description	Set Up/ Run Hours	Tool ID	Tool #	Plan Code	Accept Qty	Reject Qty	Reject Number	Insp. Stamp
150	QC9- Inspect visual per QSI004- Fusion Welds	0.00				1	Ø		BE 11/10/04
QC	**Memo**	0.00							
Quality Control									
155	QC6- Inspect dimensions to drawing	0.00				Ø			
QC	**Memo**	0.00							
Quality Control	***inspect fit of lid with base***								
157	Chemical Conversion Coat per QSI005 4.1	0.00				1	BR	11-10-5.	
HandFinish	**Memo**	0.00							
Hand Finishing	1- realodine corners ***do not acid etch***								

8 11/10/05

Dart Aerospace Ltd

W/O:		WORK ORDER CHANGES					
DATE	STEP	PROCEDURE CHANGE	By	Date	Qty	Approval Chief Eng / Prod Mgr	Approval QC Inspector

Part No: _____ **PAR #:** _____ **Fault Category:** _____ **NCR:** Yes No **DQA:** _____ **Date:** _____

Resolution: _____ **Disposition:** _____ **QA: N/C Closed:** _____ **Date:** _____

NCR:		WORK ORDER NON-CONFORMANCE (NCR)						
DATE	STEP	Description of NC Section A	Corrective Action Section B			Verification Section C	Approval Chief Eng	Approval QC Inspector
			Initial Chief Eng	Action Description Chief Eng	Sign & Date			

NOTE: Date & initial all entries

H:\fFORMS\Quality Assurance\approved QA\NCRWO RevE

Work Order ID 74257

Tuesday, September 27, 2011 1:53:23 PM

Item ID: D3915-041 **Accept** **Setup Start**

Revision ID:

Item Name: Light Lid Assemby, Long Basket **Stop**

Start Date: 9/27/2011 **Start Qty:** 1.00 **Cust Item ID:**

Required Date: 10/7/2011 **Req'd Qty:** 1.00 **Customer:**

Reference:

Run Start

Approvals: **Process Plan:** _____ **Date:** _____ **Tooling:** _____ **Date:** _____

Stop

QC: _____ **Date:** _____ **SPC (Y/N):** _____ **Date:** _____

Sequence ID/ Work Center ID	Operation Description	Set Up/ Run Hours	Tool ID	Tool #	Plan Code	Accept Qty	Reject Qty	Reject Number	Insp. Stamp
160	White Gloss(Ref:4.3.5.1) per QSI005 4.3-Alum	0.00							
Powdercoat	**Memo**	0.00							
Powder Coating	1- touch up corner with alodine only 2- Plug holes prior to								
	1ST COAT: START TIME: 1:50 OVEN TEMPERATURE: 320 °F FINISH TIME: 2:20 ********** 2nd coat if necessary ********** 2ND COAT: START TIME: _____ OVEN TEMPERATURE: _____ FINISH TIME: _____								
170	QC3- Inspect Part Finish	0.00							
QC	**Memo**	0.00							
Quality Control									

1X Ø m 11/10/05

M118439

1 Ø JN 11/10/05

Dart Aerospace Ltd

W/O:		WORK ORDER CHANGES					
DATE	STEP	PROCEDURE CHANGE	By	Date	Qty	Approval Chief Eng / Prod Mgr	Approval QC Inspector

Part No: _____ **PAR #:** _____ **Fault Category:** _____ **NCR:** Yes No **DQA:** _____ **Date:** _____

Resolution: _____ **Disposition:** _____ **QA: N/C Closed:** _____ **Date:** _____

NCR:		WORK ORDER NON-CONFORMANCE (NCR)						
DATE	STEP	Description of NC Section A	Corrective Action Section B			Verification Section C	Approval Chief Eng	Approval QC Inspector
			Initial Chief Eng	Action Description Chief Eng	Sign & Date			

NOTE: Date & initial all entries

H:\fFORMS\Quality Assurance\approved QA\NCRWO RevE

Work Order ID 74257

Tuesday, September 27, 2011 1:53:23 PM

Item ID: D3915-041 **Accept** **Setup Start** **Stop**

Revision ID:

Item Name: Light Lid Assemby, Long Basket

Start Date: 9/27/2011 **Start Qty:** 1.00 **Cust Item ID:**

Required Date: 10/7/2011 **Req'd Qty:** 1.00 **Customer:**

Reference:

Run Start **Stop**

Approvals: **Process Plan:** _____ **Date:** _____ **Tooling:** _____ **Date:** _____

QC: _____ **Date:** _____ **SPC (Y/N):** _____ **Date:** _____

Sequence ID/ Work Center ID	Operation Description	Set Up/ Run Hours	Tool ID	Tool #	Plan Code	Accept Qty	Reject Qty	Reject Number	Insp. Stamp
180	Assemble as per dwg	0.00							
HandFinish	**Memo**	0.00							
Hand Finishing	1- Install webbing as per dwg								
	2- Install placard and label as per dwg								
190	QC5- Inspect part completeness to step on W/O	0.00							
QC	**Memo**	0.00							
Quality Control									
200	Identify as per dwg & Stock Location: GA	0.00							
Packaging	**Memo**	0.00							
Packaging									

11/10/06

11/10/06

W/O ~~74251~~ 74254

Dart Aerospace Ltd

W/O:		WORK ORDER CHANGES					
DATE	STEP	PROCEDURE CHANGE	By	Date	Qty	Approval Chief Eng / Prod Mgr	Approval QC Inspector

Part No: _____ **PAR #:** _____ **Fault Category:** _____ **NCR:** Yes No **DQA:** _____ **Date:** _____

Resolution: _____ **Disposition:** _____ **QA: N/C Closed:** _____ **Date:** _____

NCR:		WORK ORDER NON-CONFORMANCE (NCR)						
DATE	STEP	Description of NC Section A	Corrective Action Section B			Verification Section C	Approval Chief Eng	Approval QC Inspector
			Initial Chief Eng	Action Description Chief Eng	Sign & Date			

NOTE: Date & initial all entries

H:\fFORMS\Quality Assurance\approved QA\NCRWO RevE

Work Order ID 74257

Tuesday, September 27, 2011 1:53:23 PM

Item ID: D3915-041 **Accept** **Setup Start**

Revision ID: **Stop**

Item Name: Light Lid Assemby, Long Basket

Start Date: 9/27/2011 **Start Qty:** 1.00 **Cust Item ID:**

Required Date: 10/7/2011 **Req'd Qty:** 1.00 **Customer:**

Reference:

Approvals: **Process Plan:** _____ **Date:** _____ **Tooling:** _____ **Date:** _____ **Run Start**

QC: _____ **Date:** _____ **SPC (Y/N):** _____ **Date:** _____ **Stop**

Sequence ID/ Work Center ID	Operation Description	Set Up/ Run Hours	Tool ID	Tool #	Plan Code	Accept Qty	Reject Qty	Reject Number	Insp. Stamp
210	QC21- Final Inspection - Work Order Release	0.00							
QC	**Memo**	0.00					11/10/12		
Quality Control									

MF 11-10-12

Dart Aerospace Ltd

W/O:		WORK ORDER CHANGES					
DATE	STEP	PROCEDURE CHANGE	By	Date	Qty	Approval Chief Eng / Prod Mgr	Approval QC Inspector

Part No: _____ **PAR #:** _____ **Fault Category:** _____ **NCR:** Yes No **DQA:** _____ **Date:** _____

Resolution: _____ **Disposition:** _____ **QA: N/C Closed:** _____ **Date:** _____

NCR:		WORK ORDER NON-CONFORMANCE (NCR)						
DATE	STEP	Description of NC Section A	Corrective Action Section B			Verification Section C	Approval Chief Eng	Approval QC Inspector
			Initial Chief Eng	Action Description Chief Eng	Sign & Date			

NOTE: Date & initial all entries

H:\fFORMS\Quality Assurance\approved QA\NCRWO RevE

Picklist Print

Tuesday, September 27, 2011 1:53:20 PM

Work Order ID: 74257

Parent Item: D3915-041

Parent Item Name: Light Lid Assemby, Long Basket

Start Date: 9/27/2011 **Required Date:** 10/7/2011

Start Qty: 1.00 **Required Qty:** 1.00

Comments: IPP Rev:A new issue DD 10.03.19 verified by:EC IPP Rev:B as per dwg revB DD 10.04.20 verified by:EC IPP Rev:C add realodine DD 10.04.26 verified by:EC IPP Rev:D as per dwg revC DD 10.08.18 verified by:EC

Component Item ID/ Item Name	Replacement Item ID	Mfg/ Purch	Bin Item	Primary Location	Last Location	Route Seq ID	Unit of Measure	Qty on Hand	Qty per Kit	Total Qty	Qty Issued	Date Issued	Status
D2957		Manufactured	No			100	Each	13.0000	4	4			
Mounting Plate											MB	11/10/03	
				Location		**Loc Qty**		**Loc Code**					
				WA		10							
					71221	10				1			
				WA005		3							
					68154	3				3			
D3915-1		Manufactured	No			100	Each	6.0000	2	2			
Rib											GMB	11/10/03	
				Location		**Loc Qty**		**Loc Code**					
				WA		4							
					63663	0							
					65321	0							
					73204	4							
				WA006		2							
					68554	2				2			
D4016-5		Manufactured	No			100	Each	6.0000	3	3			
Hinge Half, Light Lid											GMB	11/10/03	
				Location		**Loc Qty**		**Loc Code**					
				WA005		6							
					66335	3							
					68544	3				3			

Dart Aerospace Ltd

W/O:		WORK ORDER CHANGES					
DATE	STEP	PROCEDURE CHANGE	By	Date	Qty	Approval Chief Eng / Prod Mgr	Approval QC Inspector

Part No: _____ **PAR #:** _____ **Fault Category:** _____ **NCR:** Yes No **DQA:** _____ **Date:** _____

Resolution: _____ **Disposition:** _____ **QA: N/C Closed:** _____ **Date:** _____

NCR:		WORK ORDER NON-CONFORMANCE (NCR)						
DATE	STEP	Description of NC Section A	Corrective Action Section B			Verification Section C	Approval Chief Eng	Approval QC Inspector
			Initial Chief Eng	Action Description Chief Eng	Sign & Date			

NOTE: Date & initial all entries

H:\fFORMS\Quality Assurance\approved QA\NCRWO RevE

Picklist Print

Tuesday, September 27, 2011 1:53:20 PM

Work Order ID: 74257

Parent Item: D3915-041

Parent Item Name: Light Lid Assemby, Long Basket

Start Date: 9/27/2011 **Required Date:** 10/7/2011

Start Qty: 1.00 **Required Qty:** 1.00

D4019-3 Rib	Manufactured	No	100	Each	8.0000	3	3	PMB 11/10/03

Location	Loc Qty	Loc Code	
WA	8		
63667	0		
68605	8		3

D4035-045 Lid Rib Assembly, Fwd (Light)	Manufactured	No	100	Each	2.0000	1	1	PMB 11/10/09

Location	Loc Qty	Loc Code	
WA006	2		
68545	2		1

D4035-047 Lid Rib Assembly, Aft (Light)	Manufactured	No	100	Each	3.0000	1	1	PMB 11/10/03

Location	Loc Qty	Loc Code	
WA	3		
63669	0		
68546	1		1
71225	2		

D4056-1 Label Plate	Manufactured	No	100	Each	4.0000	1	1	PMB 11/10/03

Location	Loc Qty	Loc Code	
WA	4		
70338	4		1

D2728-1 Dart Logo label	Manufactured	No	180	Each	0.0000	1	1	M 11/10/03

Dart Aerospace Ltd

W/O:		WORK ORDER CHANGES					
DATE	STEP	PROCEDURE CHANGE	By	Date	Qty	Approval Chief Eng / Prod Mgr	Approval QC Inspector

Part No: _____ **PAR #:** _____ **Fault Category:** _____ **NCR:** Yes No **DQA:** _____ **Date:** _____

Resolution: _____ **Disposition:** _____ **QA: N/C Closed:** _____ **Date:** _____

NCR:		WORK ORDER NON-CONFORMANCE (NCR)						
DATE	STEP	Description of NC Section A	Corrective Action Section B			Verification Section C	Approval Chief Eng	Approval QC Inspector
			Initial Chief Eng	Action Description Chief Eng	Sign & Date			

NOTE: Date & initial all entries

H:\fFORMS\Quality Assurance\approved QA\NCRWO RevE

Picklist Print

Tuesday, September 27, 2011 1:53:20 PM

Work Order ID: 74257

Parent Item: D3915-041

Parent Item Name: Light Lid Assemby, Long Basket

Start Date: 9/27/2011 **Required Date:** 10/7/2011

Start Qty: 1.00 **Required Qty:** 1.00

D4029-041	Manufactured	No	180	Each	4.0000	1	1	
Webbing (Long Basket)								

Location	Loc Qty	Loc Code
st503	4	
69499	4	

MS20600-AD4W3	Purchased	No	180	Each	1,459.000	34	34	
Cherry Rivets								

Location	Loc Qty	Loc Code
GA	922	
118626	922	
ST321	404	
111636	48	
117505	321	
117601	35	
WA018	133	
107939	133	

NAS1149DN416J	Purchased	No	180	Each	249.0000	34	34	
Washer								

Location	Loc Qty	Loc Code
ST298	249	
114348	11	
114597	153	
13910	85	

Dart Aerospace Ltd

W/O:		WORK ORDER CHANGES					
DATE	STEP	PROCEDURE CHANGE	By	Date	Qty	Approval Chief Eng / Prod Mgr	Approval QC Inspector

Part No: _____ **PAR #:** _____ **Fault Category:** _____ **NCR:** Yes No **DQA:** _____ **Date:** _____

Resolution: _____ **Disposition:** _____ **QA: N/C Closed:** _____ **Date:** _____

NCR:		WORK ORDER NON-CONFORMANCE (NCR)						
DATE	STEP	Description of NC Section A	Corrective Action Section B			Verification Section C	Approval Chief Eng	Approval QC Inspector
			Initial Chief Eng	Action Description Chief Eng	Sign & Date			

NOTE: Date & initial all entries

H:\fFORMS\Quality Assurance\approved QA\NCRWO RevE

ITEM	QTY -041	P/N	DESCRIPTION
	X	D3915-041	LIGHT LID ASSY, LONG BASKET ASSY
1	1	D3915-101	BASKET LID WELDMENT ASSY
2	1	D2728-1	DART LOGO LABEL
3	1	D4029-041	WEBBING (LONG BASKET)
4	34	MS20600AD4W3	BLIND RIVET
5	34	NAS1149DN416J	WASHER

C

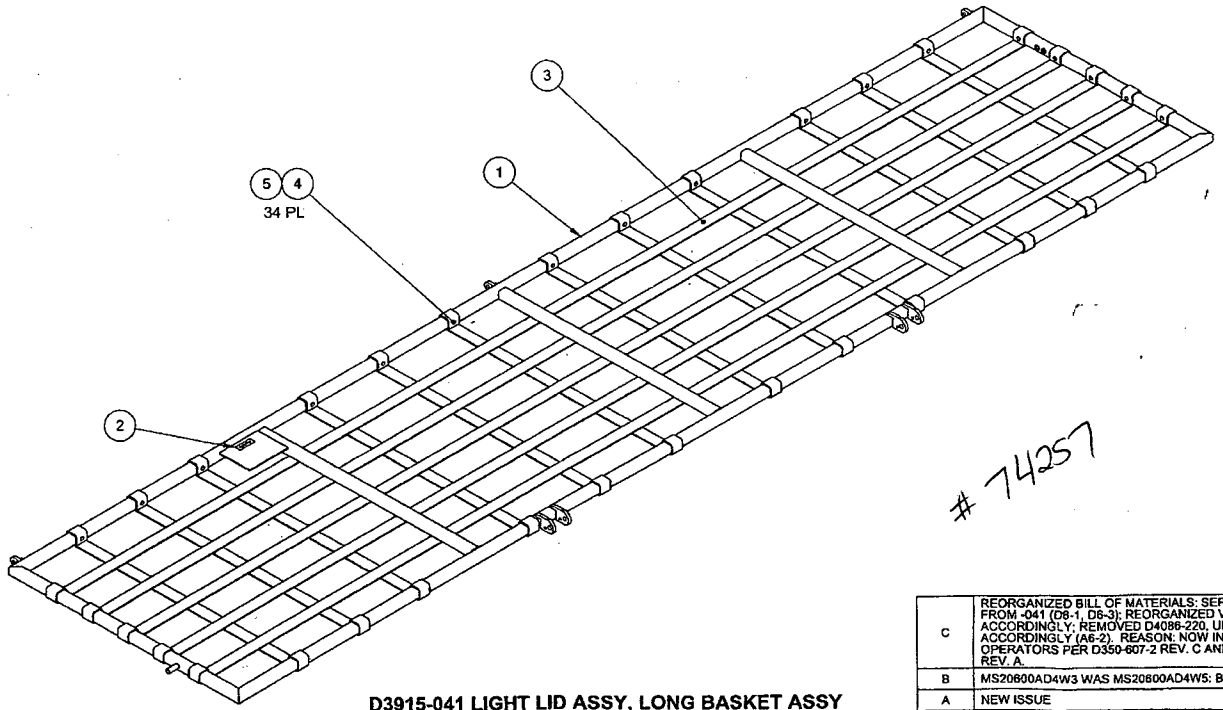

74257

RELEASED
10.08.12 CP
ECN 10-596

D3915-041 LIGHT LID ASSY, LONG BASKET ASSY

NOTES:
1) MATERIAL: N/A
2) FINISH: N/A
3) TOLERANCES: PER DART QSI 018 UNLESS OTHERWISE NOTED
4) UNITS: INCHES UNLESS OTHERWISE NOTED
5) BREAK SHARP EDGES: N/A
6) IDENTIFICATION: NONE
7) WEIGHT: 6.91 lbs

REV.	DESCRIPTION	BY	DATE
C	REORGANIZED BILL OF MATERIALS: SEPARATED -101 FROM -041 (D8-1, D8-3); REORGANIZED VIEWS ON SHT 3 ACCORDINGLY; REMOVED D4086-220, UPDATED VIEW E ACCORDINGLY (A6-2). REASON: NOW INSTALLED BY OPERATORS PER D350-607-2 REV. C AND D350-607-3 REV. A.	MB	10.08.05
B	MS20600AD4W3 WAS MS20600AD4W5: BOM & (B1-2)	JPH	10.04.06
A	NEW ISSUE	JPH	10.03.16

DESIGN	AJS	DART AEROSPACE LTD HAWKESBURY, ONTARIO, CANADA
DRAWN		
CHECKED		DRAWING NO. D3915 — REV. C — SHEET 1 OF 4
MFG. APPR.		
APPROVED		TITLE: LIGHT LID ASSY-LONG BASKET — SCALE: NTS
DE APPR.		
DATE	10.08.05	

COPYRIGHT © 2010 BY DART AEROSPACE LTD
THIS DOCUMENT IS PRIVATE AND CONFIDENTIAL AND IS SUPPLIED ON THE EXPRESS CONDITION THAT IT IS NOT TO BE USED FOR ANY PURPOSE OR COPIED OR DISCLOSED TO ANY OTHER PERSON WITHOUT WRITTEN PERMISSION FROM DART AEROSPACE LTD.

Dart Aerospace Ltd

W/O:		WORK ORDER CHANGES					
DATE	STEP	PROCEDURE CHANGE	By	Date	Qty	Approval Chief Eng / Prod Mgr	Approval QC Inspector

Part No: _____ **PAR #:** _____ **Fault Category:** _____ **NCR:** Yes No **DQA:** _____ **Date:** _____

Resolution: _____ **Disposition:** _____ **QA: N/C Closed:** _____ **Date:** _____

NCR:		WORK ORDER NON-CONFORMANCE (NCR)						
DATE	STEP	Description of NC Section A	Corrective Action Section B			Verification Section C	Approval Chief Eng	Approval QC Inspector
			Initial Chief Eng	Action Description Chief Eng	Sign & Date			

NOTE: Date & initial all entries

H:\fFORMS\Quality Assurance\approved QA\NCRWO RevE

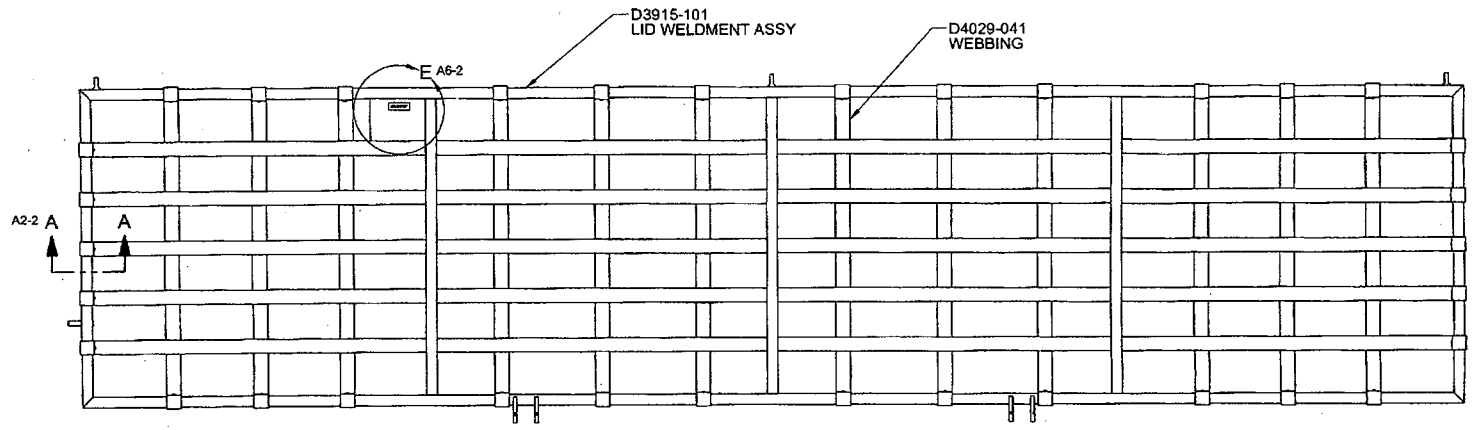

D3915-041 LIGHT LID ASSY, LONG BASKET

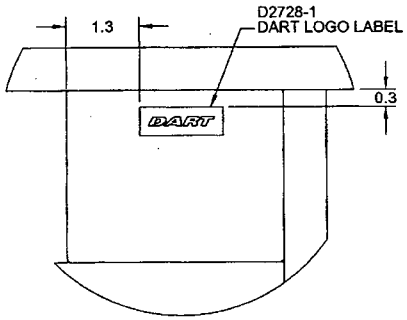

C **VIEW E** D6-2

74257

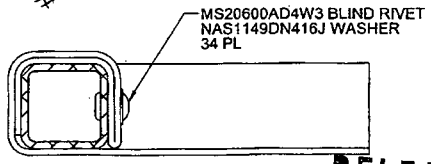

SECTION A-A C8-2

RELEASED 10.08.17

DESIGN	AJS	**DART AEROSPACE LTD** HAWKESBURY, ONTARIO, CANADA
DRAWN		
CHECKED		DRAWING NO. D3915 — REV. C — SHEET 2 OF 4
MFG. APPR.		
APPROVED		TITLE: LIGHT LID ASSY-LONG BASKET — SCALE: NTS
DE APPR.		
DATE	10.08.05	

COPYRIGHT © 2010 BY DART AEROSPACE LTD
THIS DOCUMENT IS PRIVATE AND CONFIDENTIAL AND IS SUPPLIED ON THE EXPRESS CONDITION THAT IT IS NOT TO BE USED FOR ANY PURPOSE OR COPIED OR COMMUNICATED TO ANY OTHER PERSON WITHOUT WRITTEN PERMISSION FROM DART AEROSPACE LTD.

Dart Aerospace Ltd

W/O:		WORK ORDER CHANGES					
DATE	STEP	PROCEDURE CHANGE	By	Date	Qty	Approval Chief Eng / Prod Mgr	Approval QC Inspector

Part No: _____ **PAR #:** _____ **Fault Category:** _____ **NCR:** Yes No **DQA:** _____ **Date:** _____

Resolution: _____ **Disposition:** _____ **QA: N/C Closed:** _____ **Date:** _____

NCR:		WORK ORDER NON-CONFORMANCE (NCR)						
DATE	STEP	Description of NC Section A	Corrective Action Section B			Verification Section C	Approval Chief Eng	Approval QC Inspector
			Initial Chief Eng	Action Description Chief Eng	Sign & Date			

NOTE: Date & initial all entries

H:\fFORMS\Quality Assurance\approved QA\NCRWO RevE

ITEM	QTY -101	P/N	DESCRIPTION
	X	D3915-101	BASKET LID WELDMENT ASSY
1	4	D2957	MOUNTING PLATE
2	2	D3915-1	RIB
3	3	D4016-5	HINGE HALF, LIGHT LID
4	3	D4019-3	RIB
5	1	D4035-045	BASKET LID RIB ASSY, FWD (LIGHT)
6	1	D4035-047	BASKET LID RIB ASSY, AFT (LIGHT)
7	1	D4056-1	LABEL PLATE, 350 LIGHT BASKET

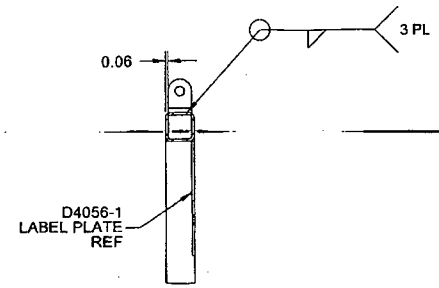

DETAIL C C8-3

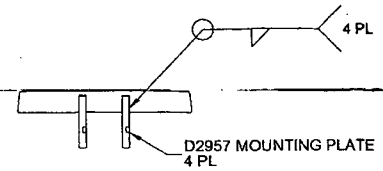

DETAIL D B3-3

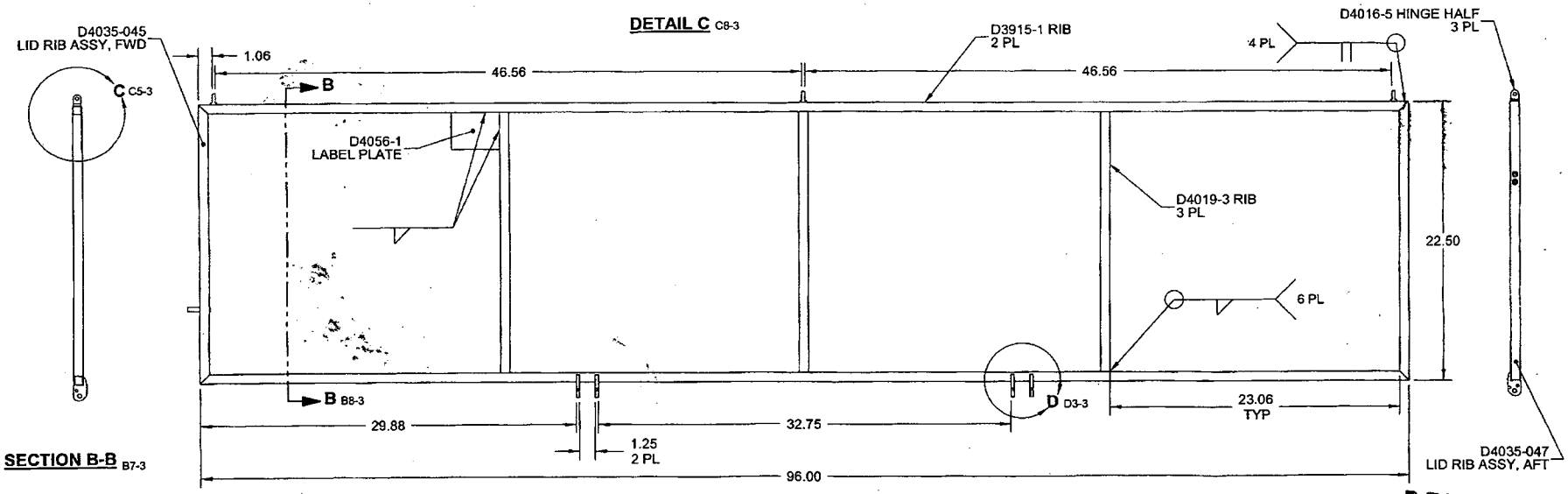

SECTION B-B B7-3

D3915-101 BASKET LID WELDMENT ASSY

RELEASED 10.08.12 QP

#74257

NOTES:
1) MATERIAL: N/A
2) FINISH: CHEMICAL CONVERSION COAT PER DART QSI 005 4.1
POWDER COAT WHITE (4.3.5.1) PER DART QSI 005 4.3
3) TOLERANCES: PER DART QSI 018 UNLESS OTHERWISE NOTED
4) UNITS: INCHES UNLESS OTHERWISE NOTED
5) BREAK SHARP EDGES: 0.005 TO 0.010 MAX
6) IDENTIFICATION: NONE
7) WEIGHT: 4.81 lbs
8) WELD PER DART QSI 004

DESIGN	AJS	DART AEROSPACE LTD HAWKESBURY, ONTARIO, CANADA
DRAWN		
CHECKED		DRAWING NO. D3915 — REV. C — SHEET 3 OF 4
MFG. APPR.		
APPROVED		TITLE: LIGHT LID ASSY-LONG BASKET — SCALE: NTS
DE APPR.		
DATE	10.08.05	

COPYRIGHT © 2010 BY DART AEROSPACE LTD
THIS DOCUMENT IS PRIVATE AND CONFIDENTIAL AND IS SUPPLIED ON THE EXPRESS CONDITION THAT IT IS NOT TO BE USED FOR ANY PURPOSE OR COPIED OR COMMUNICATED TO ANY OTHER PERSON WITHOUT WRITTEN PERMISSION FROM DART AEROSPACE LTD.

Dart Aerospace Ltd

W/O:		WORK ORDER CHANGES					
DATE	STEP	PROCEDURE CHANGE	By	Date	Qty	Approval Chief Eng / Prod Mgr	Approval QC Inspector

Part No: _____ **PAR #:** _____ **Fault Category:** _____ **NCR:** Yes No **DQA:** _____ **Date:** _____

Resolution: _____ **Disposition:** _____ **QA: N/C Closed:** _____ **Date:** _____

NCR:		WORK ORDER NON-CONFORMANCE (NCR)						
DATE	STEP	Description of NC Section A	Corrective Action Section B			Verification Section C	Approval Chief Eng	Approval QC Inspector
			Initial Chief Eng	Action Description Chief Eng	Sign & Date			

NOTE: Date & initial all entries

H:\fFORMS\Quality Assurance\approved QA\NCRWO RevE

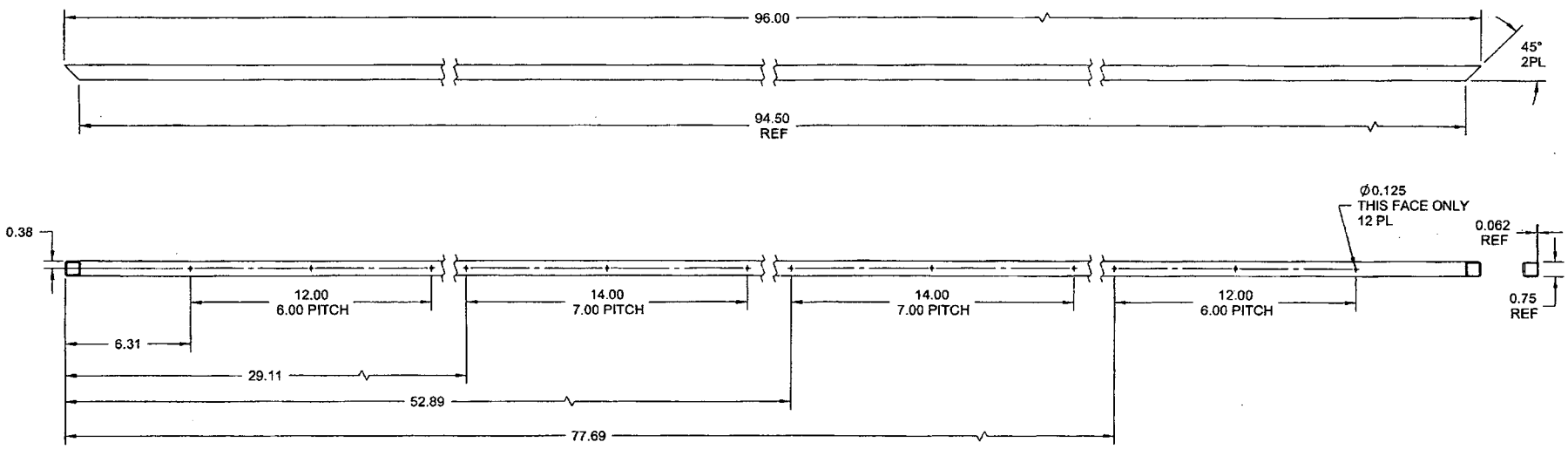

D3915-1 RIB

#74257

RELEASED
10.09.12 CP

NOTES:
1) MATERIAL: 6061-T6 (OR 6061-T651/ T6510/ T6511/ T62) SQUARE TUBING
PER AMS-QQ-A-225/8 (OR AMS 4117/ 4128/ 4115 / 4116) OR
PER AMS-QQ-A-200/8 (OR AMS 4160)
REF DART SPEC. M6061T6TS0.750W.062
2) FINISH: NONE
3) TOLERANCES: PER DART QSI 018 UNLESS OTHERWISE NOTED
4) UNITS: INCHES UNLESS OTHERWISE NOTED
5) BREAK SHARP EDGES: 0.005 TO 0.010 MAX
6) IDENTIFICATION: NONE
7) WEIGHT: 1.49 lbs

DESIGN	AJS	DART AEROSPACE LTD HAWKESBURY, ONTARIO, CANADA
DRAWN		
CHECKED	SC	DRAWING NO. D3915 — REV. C
MFG. APPR.		SHEET 4 OF 4
APPROVED		TITLE — SCALE
DE APPR.		LIGHT LID ASSY-LONG BASKET — NTS
DATE	10.08.05—	

COPYRIGHT © 2010 BY DART AEROSPACE LTD
THIS DOCUMENT IS PRIVATE AND CONFIDENTIAL AND IS SUPPLIED ON THE EXPRESS CONDITION THAT IT IS NOT TO BE USED FOR ANY PURPOSE OR COPIED OR COMMUNICATED TO ANY OTHER PERSON WITHOUT WRITTEN PERMISSION FROM DART AEROSPACE LTD.

Dart Aerospace Ltd

W/O:		WORK ORDER CHANGES					
DATE	STEP	PROCEDURE CHANGE	By	Date	Qty	Approval Chief Eng / Prod Mgr	Approval QC Inspector

Part No: _____ **PAR #:** _____ **Fault Category:** _____ **NCR:** Yes No **DQA:** _____ **Date:** _____

Resolution: _____ **Disposition:** _____ **QA: N/C Closed:** _____ **Date:** _____

NCR:		WORK ORDER NON-CONFORMANCE (NCR)						
DATE	STEP	Description of NC Section A	Corrective Action Section B			Verification Section C	Approval Chief Eng	Approval QC Inspector
			Initial Chief Eng	Action Description Chief Eng	Sign & Date			

NOTE: Date & initial all entries

H:\fFORMS\Quality Assurance\approved QA\NCRWO RevE